SolarEdge Home Hub Three Phase Inverter Home Network Antenna Replacement Support kit

This manual describes the procedure for replacing the Inverter Antenna. PN FLD-AG-48B-AKIT-A-01.

Revision History

- Revision 1.0, August 2023 – Initial release

Kit Contents

- SolarEdge Home Hub Three Phase Inverter Antenna Support kit.

Required Tools

- Torque wrench
- PH2 Philips screwdriver
- 5/16" A/F 5in·lb torque wrench
- 5/16" A/F open-ended wrench

Opening the Inverter

1. Set the ON/OFF/P Toggle Switch to "0" (OFF).

2. Turn OFF the main circuit breaker in the power distribution panel.
3. Wait five minutes for the DC Voltage inside the inverter to drop to a safe level.
4. Using a 4mm Allen hex bit, loosen the cover screws in the following sequence.
5. Turn all the screws half a turn and remove the cover.

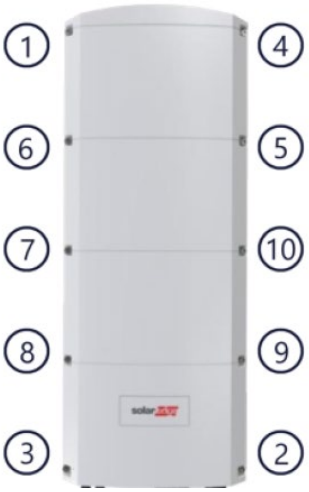

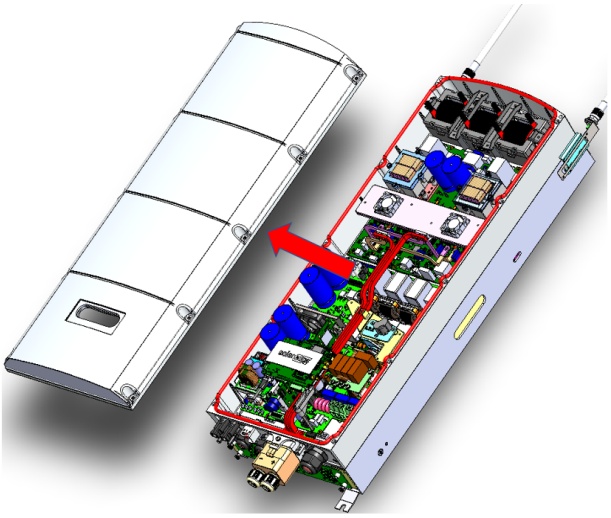

Removing the Damaged Antenna

1. Locate the Home Network Module and disconnect the antenna cable.

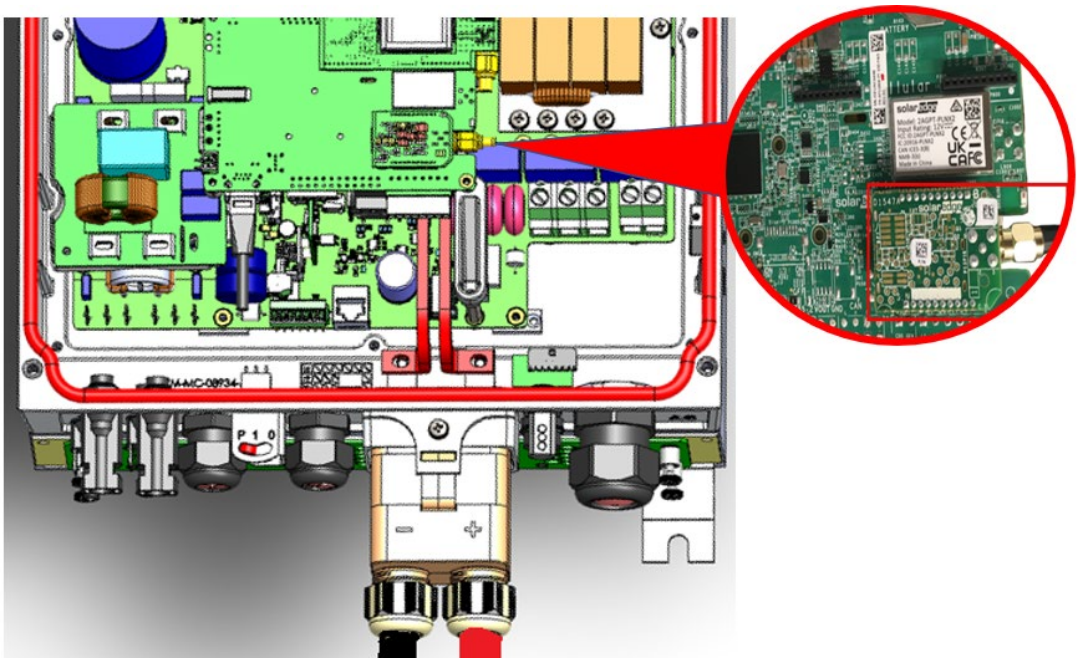

NOTE

To loosen the cable nut and disconnect the cable, use two 5/16" A/F open-ended wrenches, one on the nut of the Home Network Module, and one on the cable nut.

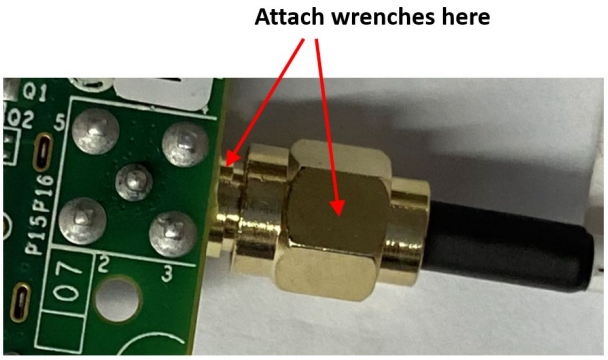

2. Remove the communication gland nut and pull the antenna cable out.

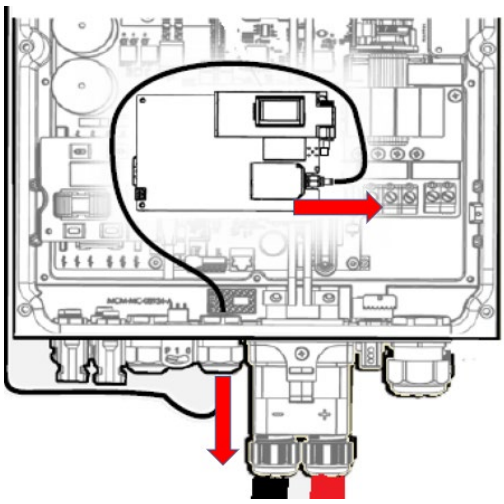

3. Slide the antenna off its bracket.

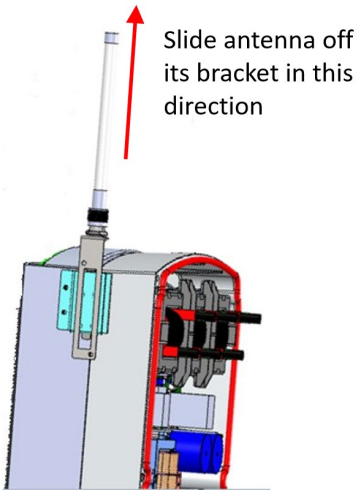

Installing the Replacement Antenna

1. Slide the new antenna onto its bracket.
2. Feed the antenna cable through the communication gland nut.
3. Route the antenna cable as shown and attach the antenna cable to the Home Network Module.

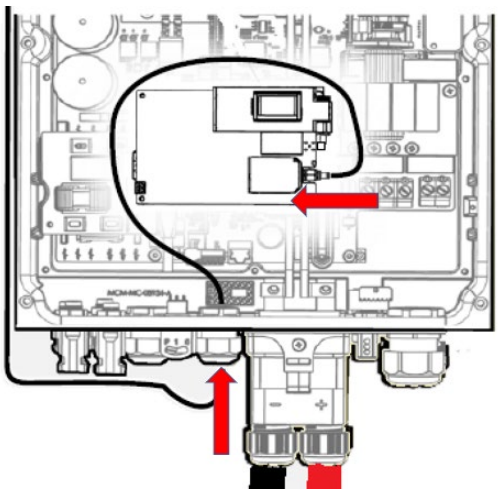

4. Tighten the communication gland nut to a torque of 3.5N·m (31lbf·in).
5. Using a 5/16" A/F open-ended wrench and a 5/16" A/F 5 in·lb torque wrench, tighten the antenna cable nut to a torque of 0.56N·m (5in·lb).

Reattaching the Cover Assembly

1. Place the cover in position and insert the screws.

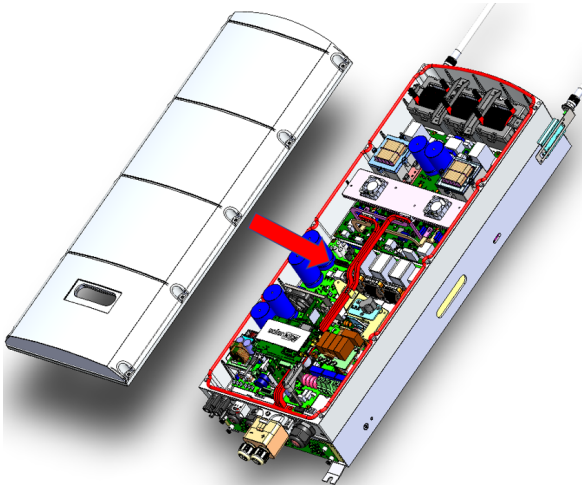

2. Using a 4mm hex bit and a torque wrench, tighten the screws to a torque of 4N·m (35.4lbf·in).
3. Tighten the screws in the following sequence:

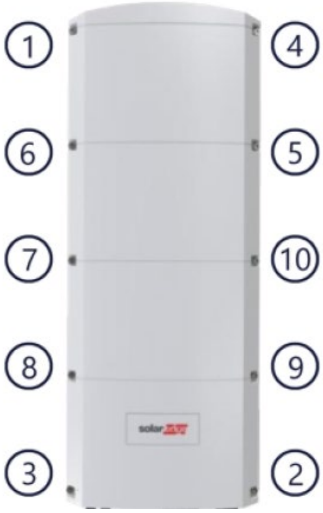

4. Turn ON the main AC circuit breaker.
5. Set the ON/OFF/P Switch to “1” (ON).